NOVALAB pipe connection for ceiling mounting



Attributes

- Self-draining due to gradient
- Inlet: male thread G3/4B
- Brass EPS-coated green RAL 6032

Variants	Art.-No.:
	70 1392 35

Dimensional Drawings

Art.-No.: 70 1392 35

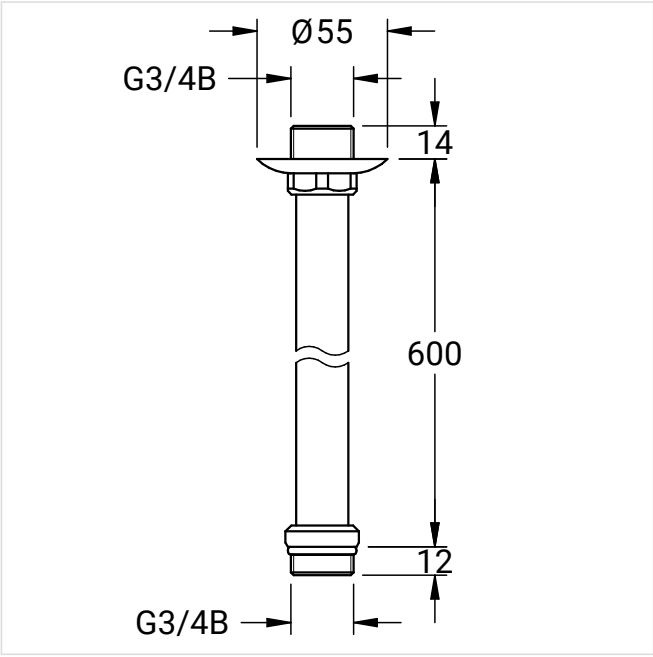

NovaLab GmbH
Brunsbütteler Damm 446
13591 Berlin

Phone +49 (0) 30 36 403 36 20
Fax +49 (0) 30 36 403 36 26
Mail: info@novalab-gmbh.de