NOVALAB savety-shower head 5 jets with pipe connection for ceiling mounting



Attributes

- ceiling installation
- Emergency shower head with nozzle holes and swirl discs for optimum spray jet
- Replaceable nozzle base, nickel-plated
- Self-draining shower head and wall bracket by gradient
- Emergency shower head 7 nozzle bores (approx. 60 l/min at 1.5 bar flow pressure)
- Water connection: external thread G3/4B
- Brass EPS-coated green RAL 6032
- Fulfils the requirements of DIN EN 15154-1 and the German BGI/GUV-I 850-0 ‘Safe working in laboratories’

Variants	Art.-No.:
	70 1390 35

Dimensional Drawings

Art.-No.: 70 1390 35

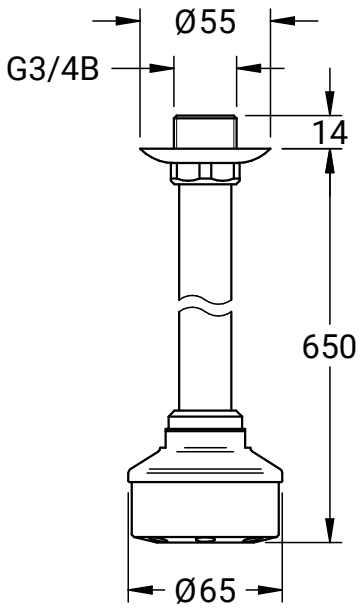

NovaLab GmbH
Brunsbütteler Damm 446
13591 Berlin

Phone +49 (0) 30 36 403 36 20
Fax +49 (0) 30 36 403 36 26
Mail: info@novalab-gmbh.de

Pressure Loss Curve

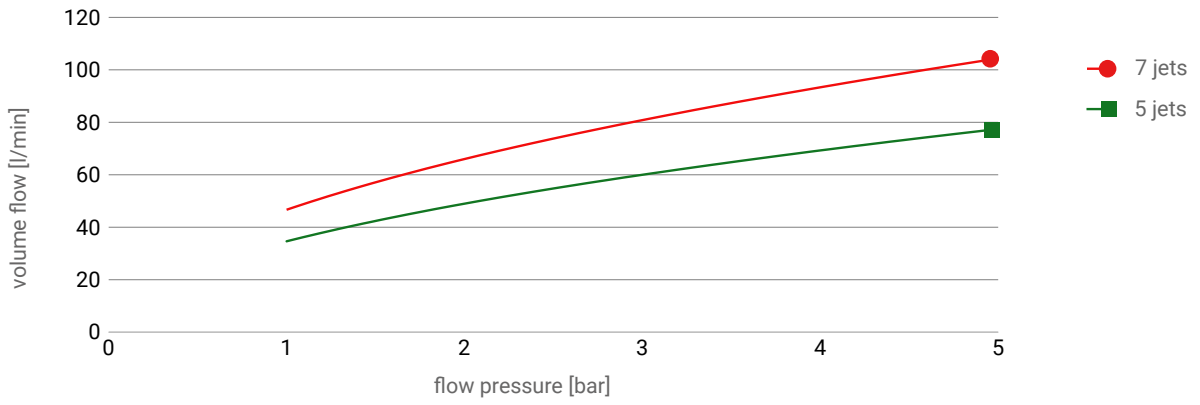

NovaLab GmbH
Brunsbütteler Damm 446
13591 Berlin

Phone +49 (0) 30 36 403 36 20
Fax +49 (0) 30 36 403 36 26
Mail: info@novalab-gmbh.de