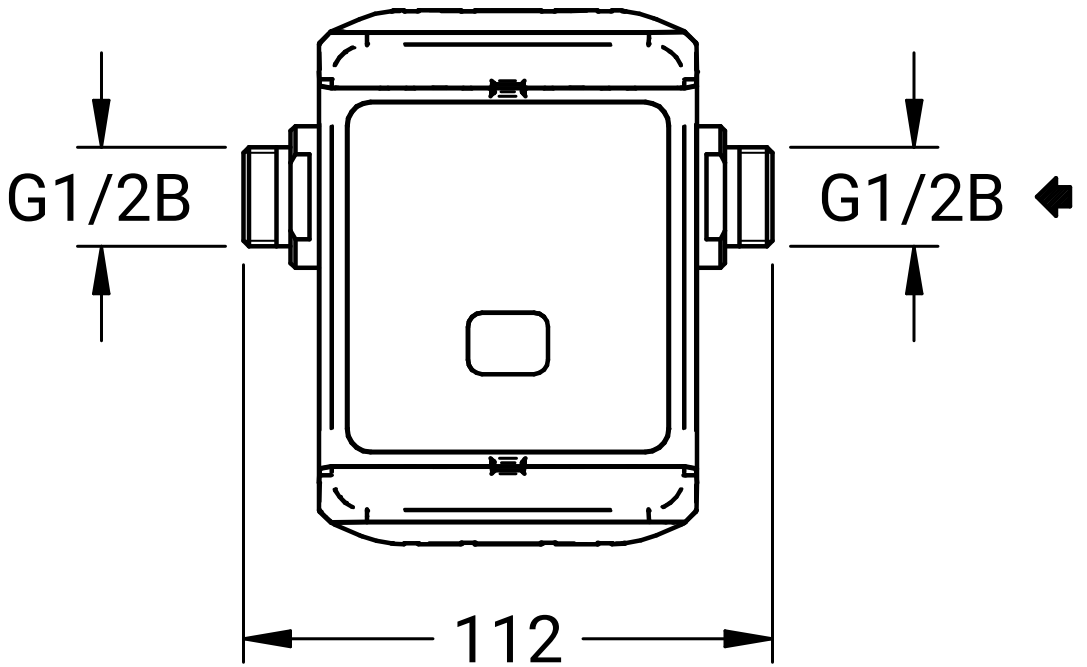
G1/2B
G1/2B
112

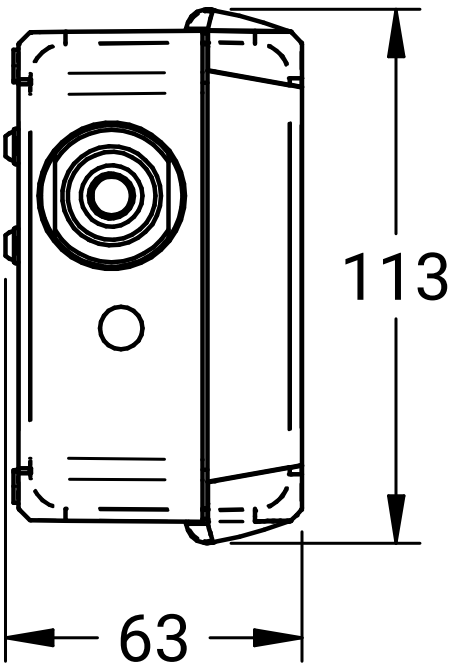
113
63