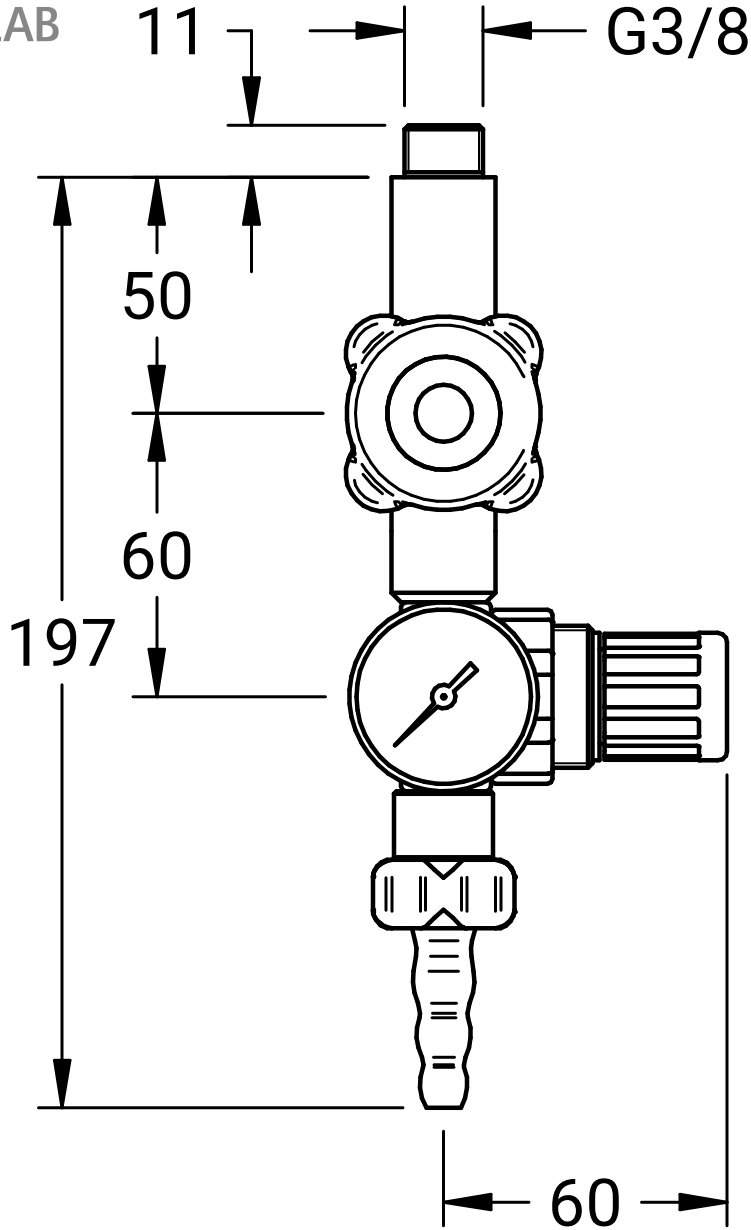
11
G3/8B
50
60
197
60

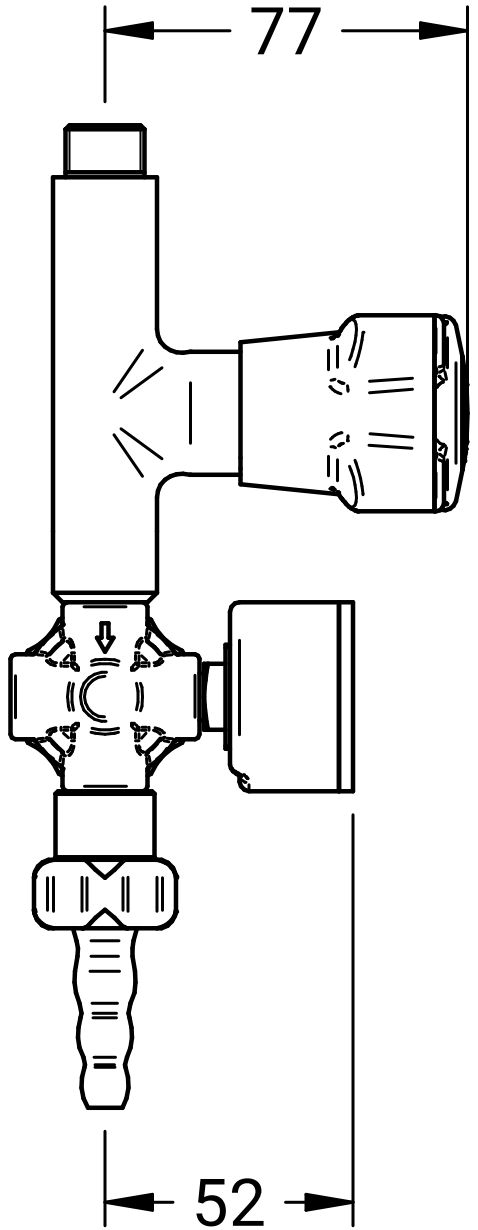
77
52