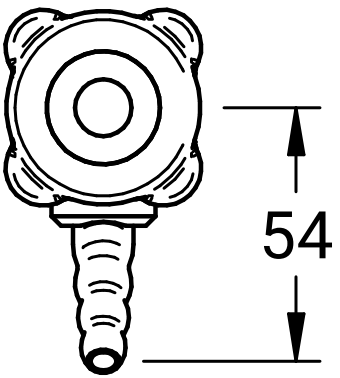
54

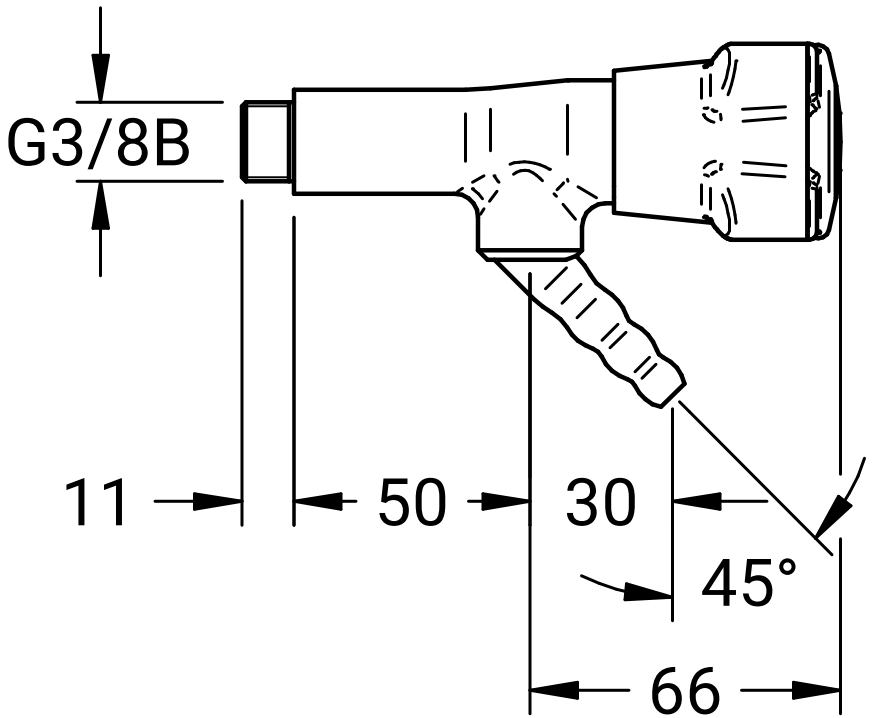
G3/8B
11
50
30
45°
66