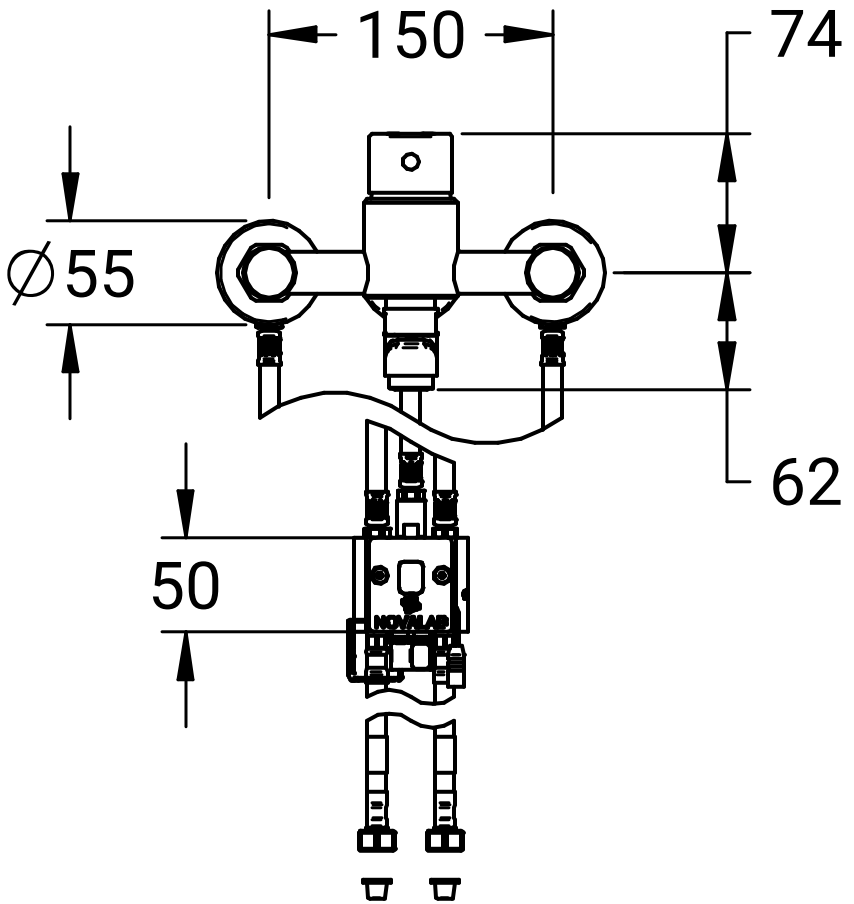
150
74
∅55
62
50
NOVALAB

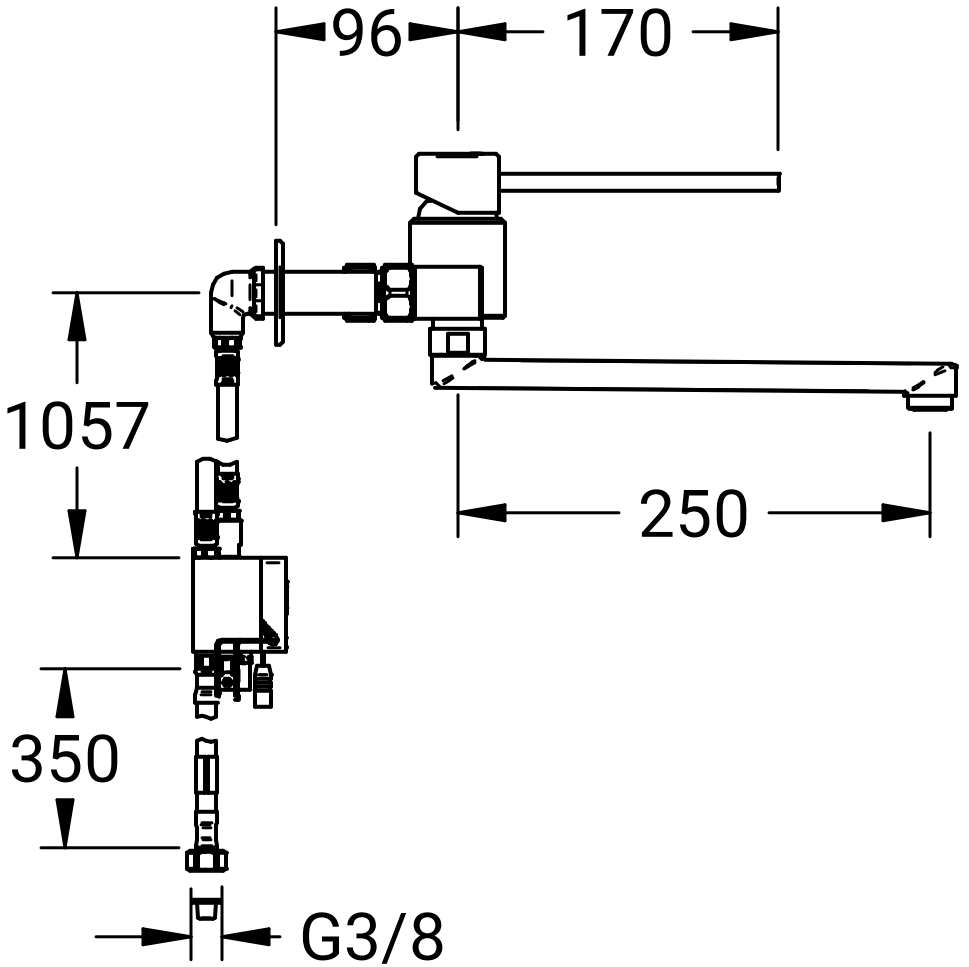
96
170
1057
250
350
G3/8

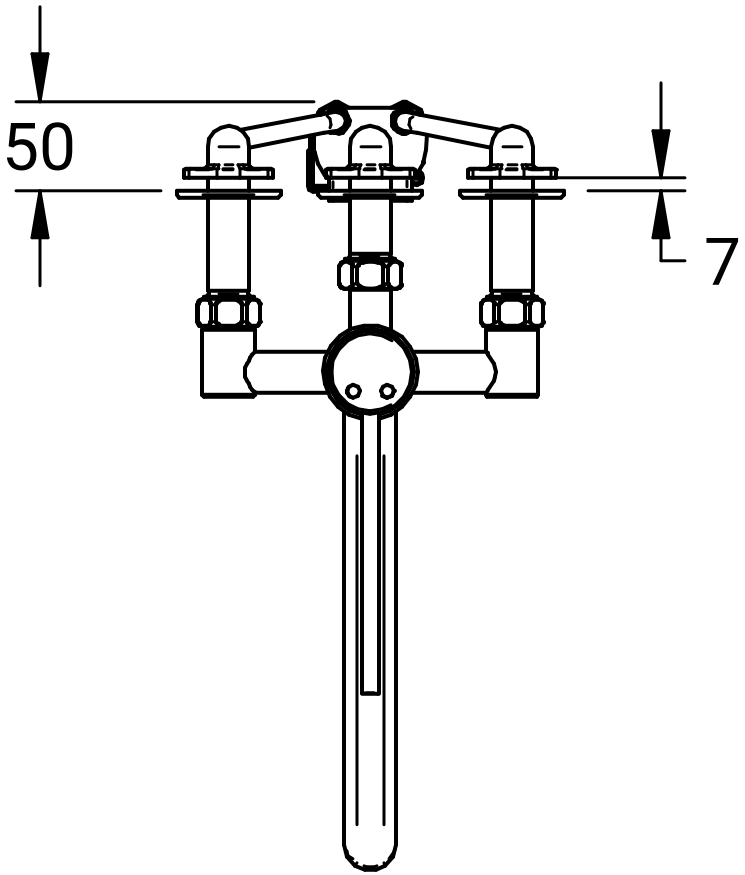
50
7