NOVALAB

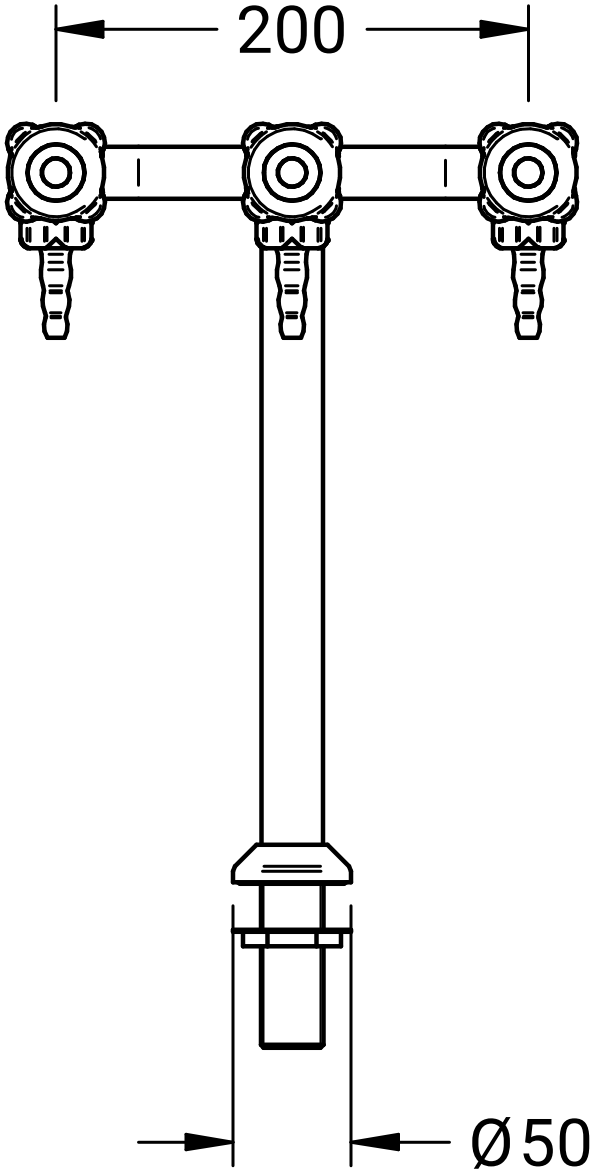

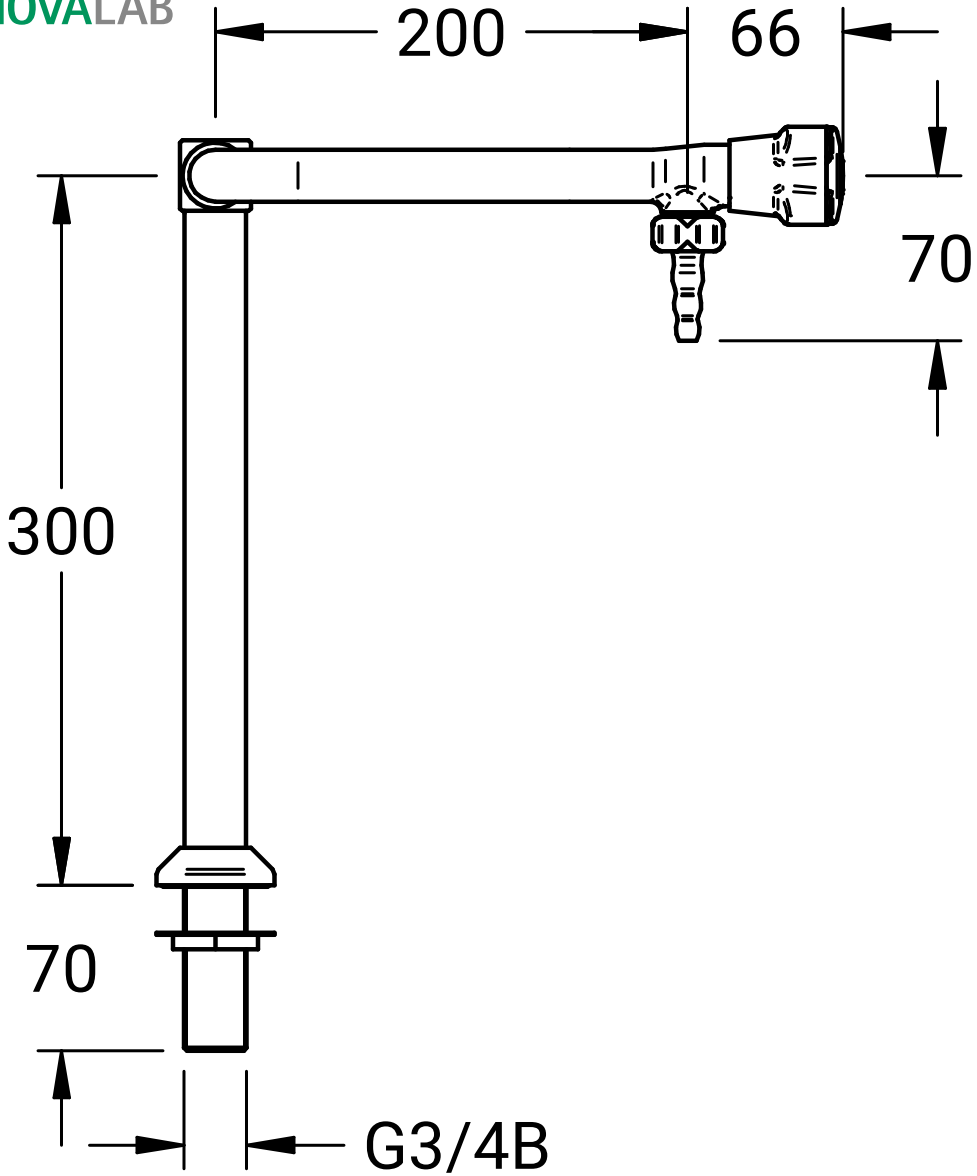
200
66
70
300
70
G3/4B